Smith & Hawken®

UNCOMPROMISING QUALITY™

Target.com/smithandhawken · Guest Service: 1-800-591-3869

© 2011 Target Stores.

Smith & Hawken®

Solenti™ Collection Chaise

With Smith & Hawken's 30 year history, you can rest assured that each piece we sell is impeccably crafted and beautifully designed to honor the heritage of gardening and outdoor living. We thank you for purchasing the Solenti Collection Chaise, a piece that's sure to bring you years of enjoyment.

To ensure easy assembly, please read this manual. Should you experience any problems, please contact Guest Service at 1-800-591-3869.

NOTE: BEFORE ASSEMBLING, MAKE SURE YOU HAVE ALL PARTS AND HARDWARE LISTED BELOW.

Unpack the Solenti Collection Chaise on a protected, level surface and identify the following components.

Included Parts

A. Seat and Backrest
B. Legs with Rollers (2)
C. Legs without Rollers (2)

Included Hardware

C. Screws (8)
Hex Wrench

We recommend having two people on hand to safely assemble this product.

How to assemble Your Solenti Collection Chaise

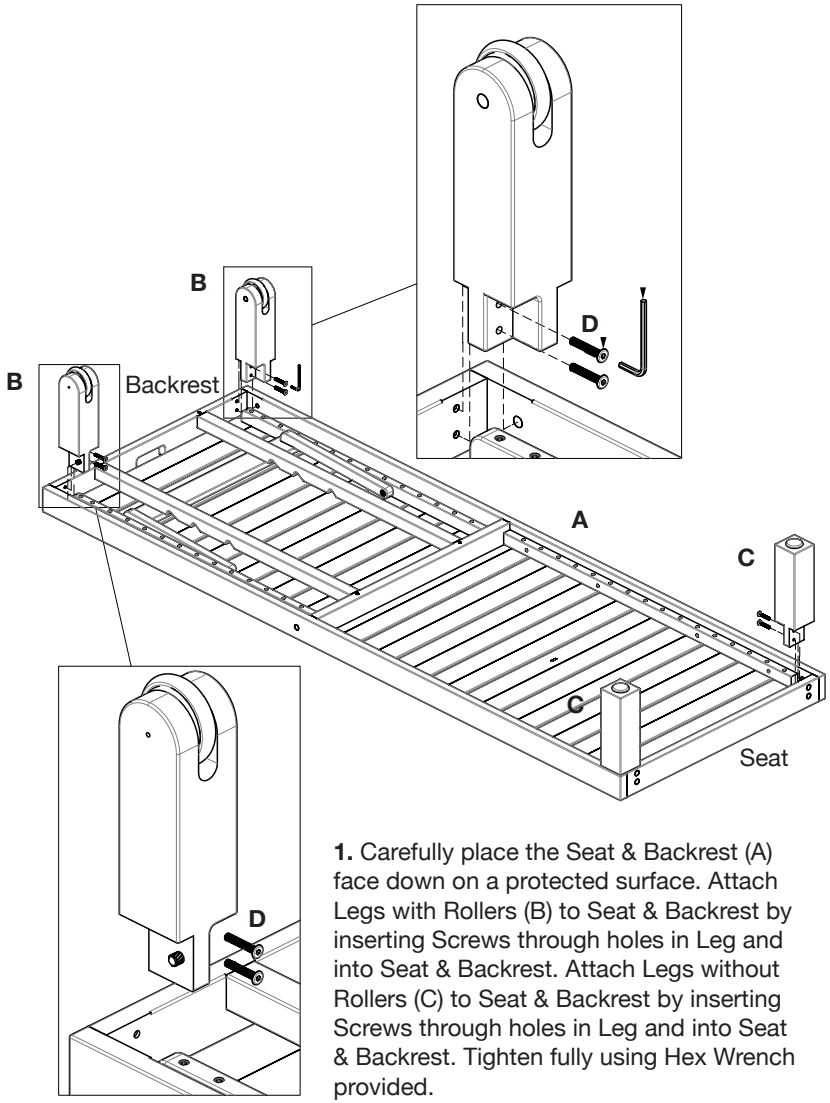

1. Carefully place the Seat & Backrest (A) face down on a protected surface. Attach Legs with Rollers (B) to Seat & Backrest by inserting Screws through holes in Leg and into Seat & Backrest. Attach Legs without Rollers (C) to Seat & Backrest by inserting Screws through holes in Leg and into Seat & Backrest. Tighten fully using Hex Wrench provided.

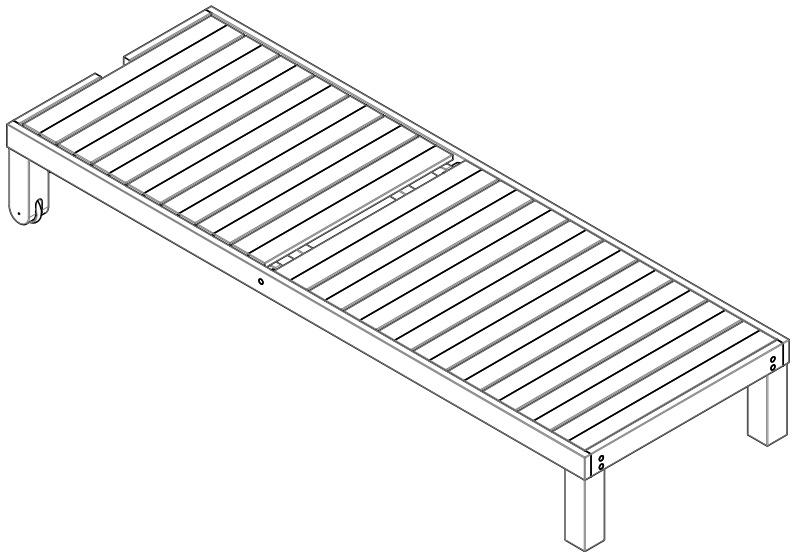

2. Ensure all fittings on legs are fully tightened before turning the chaise upright.